Package Type T.F1

Mounting Force **40.0 ÷ 50.0 kN**
Nominal Weight **1500 g**

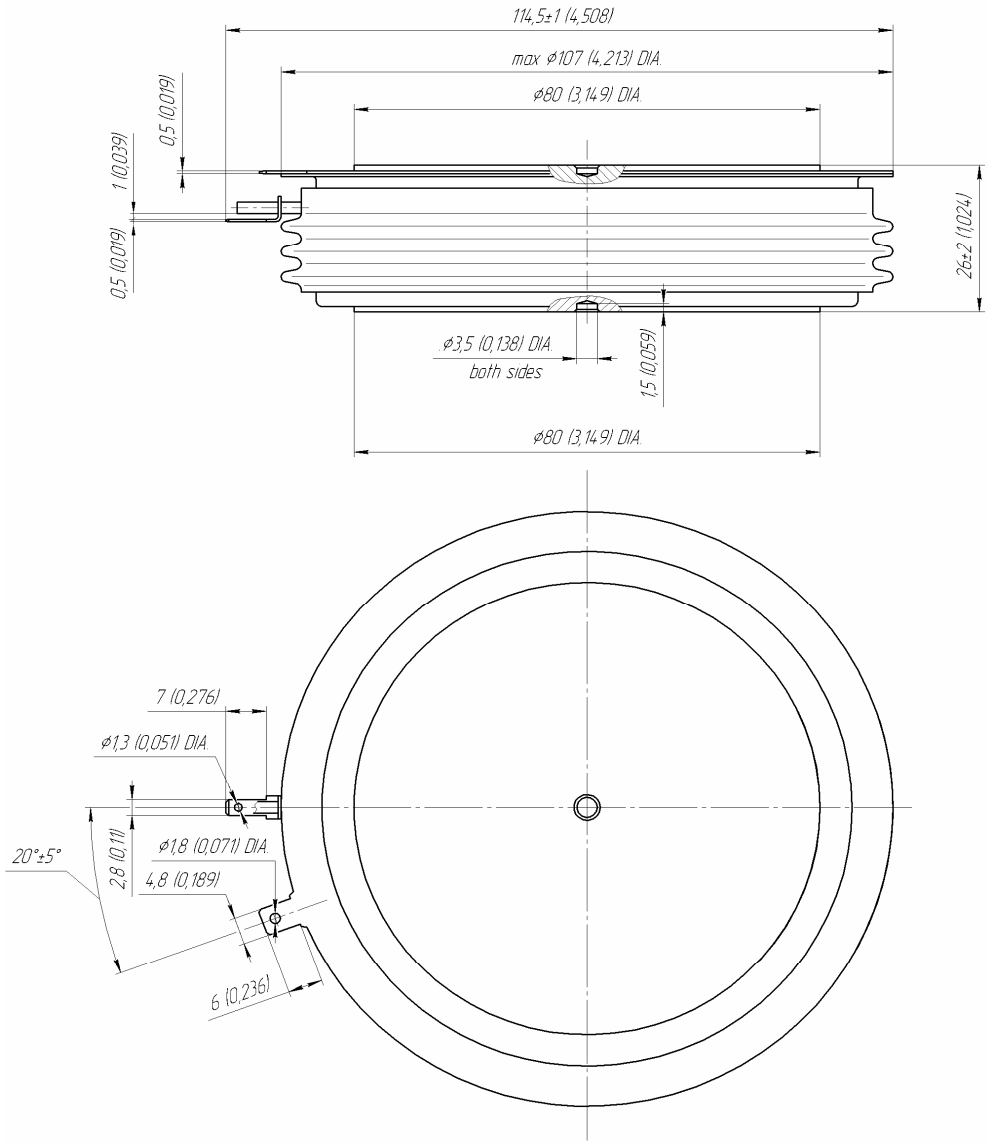

D_s	**27.37 (1.077)**	*The surface creepage distance* is defined as the shortest path along the ceramic surface between the anode flange and the gate contact
D_a	**16.00 (0.629)**	*The air distance* is defined as the shortest direct path between the anode flange and gate contact

All dimensions in millimeters (inches)